Ducting & Transition Boxes

A Full Range of Diameters & Lengths Available

Vacuum formed and aluminum transition boxes, and ducting shown

Specifications

Vacuum-Formed Transitions:

- Opening dimensions are 0.375" (0.95cm) larger than transition size (i.e., 10" X 5" VF has a 10.375" X 5.375" opening. 25.4cm X 12.7cm VF has a 26.4cm X 13.7cm opening).
- Flange to flange dimensions are 1.5" (3.8cm) larger than transition size (i.e., 10" X 5" VF = 11.5" X 6.5" flange to flange. 25.4cm X 12.7cm VF = 29.2cm X 16.5cm flange to flange).
- Depth of 4x VF models is 4.0" (10.2cm) (measured from back of flange).
- Depth of 5x and 6x VF models i.e., either 4.5" (11.4cm) or 5.75" (14.6cm) depending on use of round or obround rings.
- Flange dimensions are 0.5625" (1.43cm) on all sides.

Square Vacuum-Formed Transitions:

- Available in 5.25" and 6.25" (13.34cm and 15.88cm) square vacuum-formed transition boxes.
- Opening dimensions are 0.5" (1.27cm) larger than transition size.
- Flange to flange dimensions are 1.75" (4.4cm) larger than transition size.
- Depth is 0.125" (0.32cm) longer than the transition size.
- Flange dimensions are 0.625" (1.59cm) on all sides.

Vacuum Formed T-Boxes:

- Height of 10,000, 12,000 and 16,000 T-box with mounting flange is 7.875" (20.0cm).
- Height of 7,000 T-box with mounting flange is 6.875" (17.5cm).
- The 10,000, 12,000 and 16,000 T-boxes accommodate 6", 5" and 4" duct rings on one side and 5", 4" and 3" duct rings on the other side (15.2cm, 12.7cm, 10.2cm and 12.7cm, 10.2cm, 7.6cm respectively).

(Continued on reverse side)

Key Benefits

Ducting Design

- Two types of ducting available: round/wire with woven fabric and round/wire and mylar fabric shell with 1.0" (2.6cm) wall thickness insulation.
- Full range of diameters and lengths.
- All ducting attaches easily to associated rings.

Transition Box Design

- Large selection and variety available in aluminum and ABS plastic.
- Air flow designed and tested components.
- Matched to Marine Air Systems' grilles and blowers.
- Non-restrictive air flow.
- All rings designed for close tolerance fit with ducting.
- Perimeter flanges on all boxes for mounting ease.
- Aluminum Style Transitions and Boxes are fully insulated, available in standard and custom sizes, and are ideal for applications where space is limited.

(Continued on reverse side)

ISO 9001:2000

L–2131 Rev. 20080829

MARINE AIR SYSTEMS®

- The 7,000 T-box accommodates 5" and 4" duct rings on one side and 4" and 3" duct rings on the other side (12.7cm, 10.2cm and 10.2cm, 7.6cm respectively).

Aluminum Transitions:

- Opening dimensions are 0.25" (0.64cm) larger than transition size (i.e., 10" X 5" AL has a 10.25" X 5.25" opening. 25.4cm x 12.7cm AL has a 26.0cm X 13.3cm opening).
- Flange to flange dimensions are 1.75" (4.4cm) larger than transition size (i.e.,10" X 5" AL = 11.75" X 6.75". 25.4cm X 12.7cm AL = 29.8cm X 17.1cm).
- Depth of AL transition box is 0.25" (0.64cm) longer than the diameter of largest round ring (measured from back of flange).
- Flange dimensions are 0.75" (1.9cm) on all sides.

Obround Rings Dimensions:

- 3"OB =3.875" X 1.625" (9.84cm X 4.13cm)
- 4"OB =5.125" X 2.250" (13.02cm X 5.72cm)
- 5"OB =6.500" X 2.625" (16.51cm X 6.67cm)
- 6"OB =7.438" X 3.375" (18.89cm X 8.57cm)
- 7"OB =9.000" X 3.625" (22.86cm X 9.21cm)
- 8"OB =9.250" X 5.000" (23.50cm X 12.70cm)
- All obround rings are made of ABS plastic, except the 8"OB which is made of aluminum. Add 0.25" (0.64cm) to obround dimensions for minimum box size. All rings are 2.0" (5.1cm) deep.

Key Benefits (continued)

- Versatile ABS plastic transitions and boxes feature off-the-shelf availability and are vacuum formed for consistent quality.
- ABS plastic T-boxes have insulated mounting pads, unique stepped ring design for flexibility, and feature off-the-shelf availability.

VF = Vacuum Formed AL = Aluminum

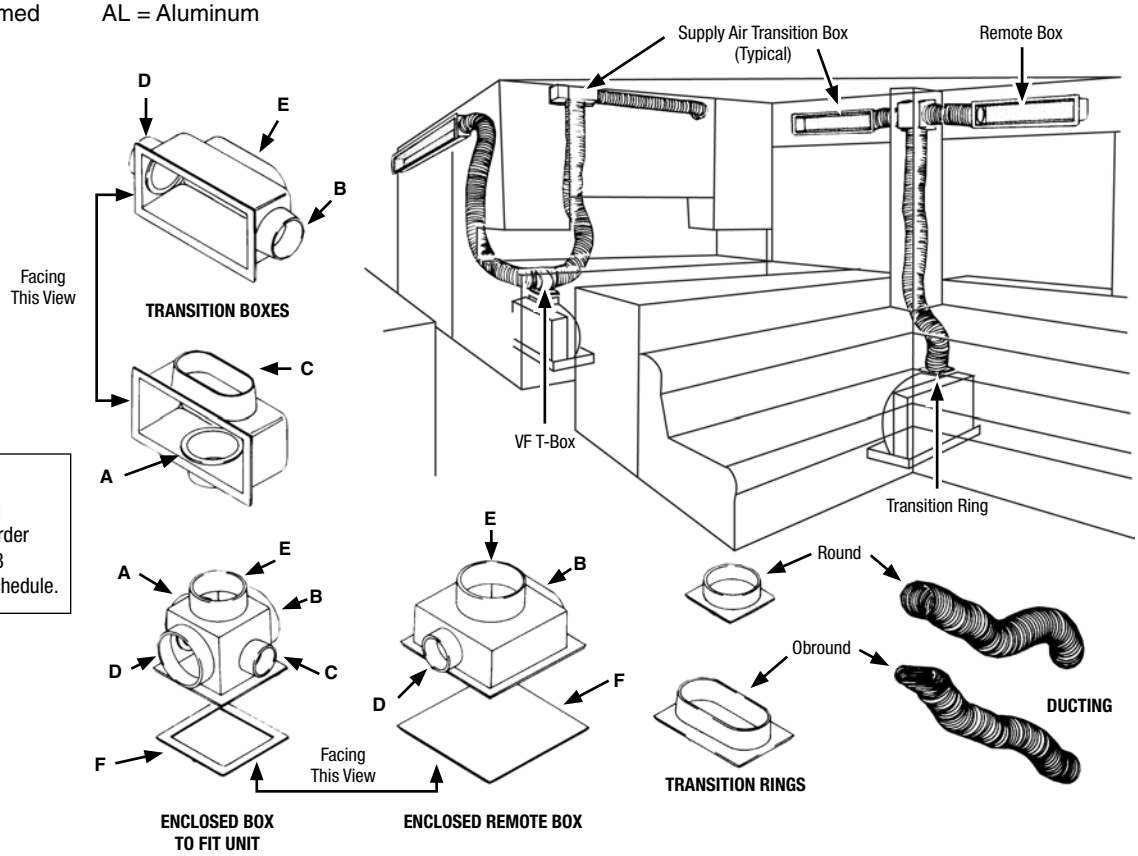

NOTE: Letters denote location of rings when ordering boxes. See order form found in ID: 2163 Marine Air DX price schedule.

DOMETIC CORPORATION, ENVIRONMENTAL DIVISION
2000 N. Andrews Ave. Ext. I Pompano Beach, FL 33069 USA I 954-973-2477 I Fax 954-979-4414
P.O. Box 15299 I Richmond, VA 23227 USA I 804-746-1313 I Fax 804-746-7248
www.DometicEnviro.com I sales@DometicEnviro.com

United States & Canada Service Only:
8:00 AM to 5:00 PM Eastern Time I Marine Air AC Products: 954-973-2477
Cruisair AC Products: 804-746-1313

24/7 AC SERVICE HOTLINE: 5:00PM to 8:00 AM: 888-440-4494

International Sales & Service:
Europe & the Middle East: Call +44(0)870-330-6101
For all other areas visit our website to find your nearest distributor.

Dealer:

Environmentally Responsible

L–2131 Rev. 20080829

Dometic

MARINE AIR SYSTEMS