Blinds – for perfect privacy protection

Supermini double cassette blind 1302

Intelligent design for perfect comfort on the move: the flynet and blind can be clipped together and seamlessly adjusted as required. Alternatively the roller blind can be used individually and secured in three positions. The special cassette design provides additional ventilation: the air can circulate between the pane and the closed blind, while privacy and insect protection are assured.

- Night latch setting: when closing the blind a small section is left ajar so that the air can circulate through the flynet
- Easy installation: flynet at the top of the window and blind at the bottom
- Highly heat reflective aluminium coating of the roller blind
- High flexibility: vertical guide rails can be trimmed to size
- Also available for rooflights

Dometic SEITZ Supermini double cassette blind 1302

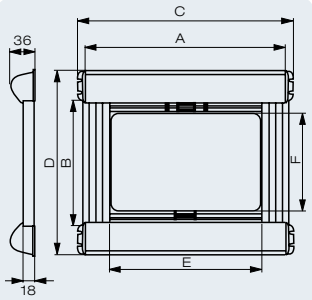

A = ordering size width
B = ordering size height
C = overall width
D = overall height
E = width window cut-out
F = height window cut-out

Standard sizes

Size A [mm]	Size B [mm]	Size C [mm]	Size D [mm]	Size E [mm]	Size F [mm]	Weight [kg]
630	700	658	790	580	650	1.30
680	700	708	790	630	650	1.35
730	700	758	790	680	650	1.41
780	700	808	790	730	650	1.47
830	700	858	790	780	650	1.53
930	700	958	790	880	650	1.65
1030	700	1058	790	980	650	1.77
1130	700	1158	790	1080	650	1.89
1230	700	1258	790	1180	650	2.00
1330	750	1358	840	1280	700	2.15
1430	750	1458	840	1380	700	2.27
1480	750	1508	840	1430	700	2.33
1530	750	1558	840	1480	700	2.39

Available sizes: 300–1500 mm width, up to 750 mm height

Dometic SEITZ roof blind 1302

Special sizes for rooflights

480	500	508	590	430	450	0.96
540	500	568	590	490	450	1.09
580	600	608	690	530	550	1.19

Rastrollo 2000

Designed for installation above the top edge of the window cut-out this blind is the ideal solution for frameless windows. It comes with a roller flynet and a roller blind for sun protection – both adjustable in various positions. Integrated slots ensure good air circulation even when blind is closed.

- Space-saving installation over the top edge of the window cut-out
- Highly heat reflective aluminium coating
- High flexibility: guide rails can be trimmed to size
- Very effective insect protection

Dometic SEITZ Rastrollo 2000

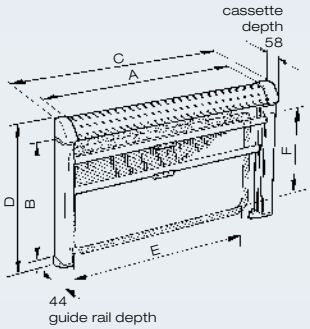

A = ordering size width
B = ordering size height
C = overall width
D = overall height
E = width window cut-out
F = height window cut-out

Standard sizes

Size A [mm]	Size B [mm]	Size C [mm]	Size D [mm]	Size E [mm]	Size F [mm]	Weight [kg]
630	700	670	794	600	650	1.52
680	700	720	794	650	650	1.57
730	700	770	794	700	650	1.63
780	700	820	794	750	650	1.68
830	700	870	794	800	650	1.74
930	700	970	794	900	650	1.85
1030	700	1070	794	1000	650	1.96
1130	700	1170	794	1100	650	2.06
1230	700	1270	794	1200	650	2.17
1330	800	1370	894	1300	750	2.37
1430	800	1470	894	1400	750	2.48
1530	800	1570	894	1500	750	2.59
1630	800	1670	894	1600	750	2.70
1730	800	1770	894	1700	750	2.81

Available sizes: 300 – 2000 mm width, up to 1300 mm height

Roller blind

Duette honeycomb blind

Two blind systems for driver's cabins

Ideal for stopping unwanted views and increasing the thermal insulation of the vehicle: Dometic SEITZ driver's cabin blinds are quickly installed. Available as double-pleated Duette honeycomb blind, or as windscreen roller blind for Fiat Ducato type 250 vehicles built after mid 2006. The aluminium coating effectively reduces the interior temperature during the day, while offering enhanced insulation at night. What's more, the blinds for the front and side windows help protect privacy and valuables.

- Two systems available for front window: double-pleated Duette honeycomb blind or windscreen roller blind [for Fiat Ducato type 250 built after mid 2006]
- Side window blinds in heat insulating double-pleated Duette honeycomb material [for Fiat Ducato type 250, Peugeot Boxer and Citroën Jumper models built after mid 2006]
- Simple and quick installation without covering up ventilation slots
- Delivered with installation material.

Dometic SEITZ blind systems for driver's cabins

Front window	Double-pleated Duette honeycomb blind or windscreen roller blind [for Fiat Ducato type 250, built after mid 2006]
Side window	Heat insulating, double-pleated Duette honeycomb blind [for Fiat Ducato type 250, Peugeot Boxer, Citroën Jumper models built after mid 2006]

Contents, specifications and availability are subject to change serving the technical improvement.

Flynet for two-piece entrance door – lets fresh air in and keeps insects out

A smart and low-cost ventilation solution that allows fresh air in and keeps insects out: Dometic SEITZ flynets for two-piece entrance doors. The aluminium frame is simply attached to the upper half of the door which can be opened separately.

- Durable powder-coated aluminium frame
- Robust glass-fibre reinforced fly screen
- Very easy to use
- Small space requirement [depth only 62 mm]
- Available in two standard sizes

Dometic SEITZ flynet for two-piece entrance doors

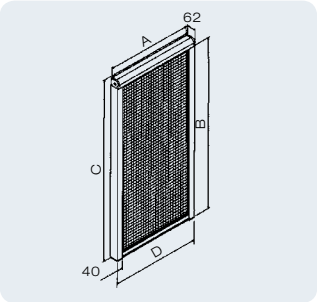

Ordering size [mm]	Size A [mm]	Size B [mm]	Size C [mm]	Size D [mm]	Weight [kg]
580 x 1100	580	1100	1165	592	2.8
615 x 1100	615	1100	1165	627	2.8

A = order size width
B = order size height
C = overall height
D = overall width

Soft blind – single-cassette system

Designed for flexible and space-saving installation: Dometic SEITZ soft blinds consist of a cassette [holding the flynet and the blind] and two guide rails. The flynet and blind can be seamlessly adjusted as required. Good ventilation and insect protection are provided at all times.

- Space-saving single-cassette system
- Two material options: single-pleated or double-pleated Duette honeycomb blind
- Flynet and blind are seamlessly adjustable
- Good ventilation at all times

Dometic SEITZ soft blinds

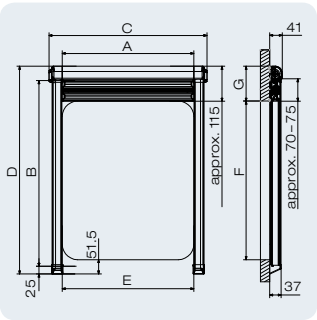

Available sizes	Width: 200–1800 mm Height: 100–1200 mm
Colour/material	Cassette/guide rails: RAL 9001 Blind material: grey or beige/double-pleated Duette honeycomb or single-pleated

A = ordering size width*
B = ordering size height*
C = overall width
D = overall height

E = width window cut-out
F = height window cut-out
G = distance from upper edge of blind to window cut-out

* Sizes A and B have to be rounded up or down to the next 5 mm

Comfort blind – double-cassette system

Ease of installation guaranteed: Dometic comfort blinds are supplied as a pre-assembled, rigid frame construction consisting of two cassettes and two guide rails. The flynet and the blind can be clipped together for convenient one-hand operation, or adjusted independently of each other.

- Ready to install with pre-assembled, sturdy frame construction
- Two cassettes [top cassette holds the flynet, bottom cassette the blind]
- Flynet and blind can be seamlessly adjusted together
- Three material options: single-pleated, double-pleated Duette honeycomb or roller blind
- Aluminium end strips
- Designed for aluminium framed and frameless windows

Dometic SEITZ comfort blinds

for frameless windows or S7/S7Z** aluminium framed windows

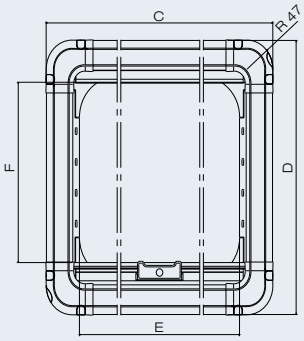

A = ordering size width*
B = ordering size height*
C = overall width
D = overall height
E = clear opening width
F = clear opening height

Available sizes	Width: 200–1800 mm Height: 100–1200 mm
Colour/material	Frame: RAL 9002 or RAL 1013 Blind material: grey or beige/double-pleated Duette honeycomb, single-pleated or roller blind

* Sizes A and B [min. 100 mm] are calculated from sizes E and F as follows:
Frameless windows: A = E – 40 mm, B = F – 40 mm; S7/S7Z windows: A = E – 65 mm, B = F – 65 mm.
** Wall thickness: S7 windows 24–50 mm; S7Z windows 28–56 mm

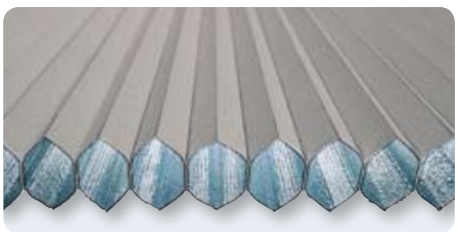

Double-pleated Duette honeycomb blind

Single-pleated blind

Roller blind

Contents, specifications and availability are subject to change serving the technical improvement.